XLC 400 - CP anti-cavitation version - Technical details

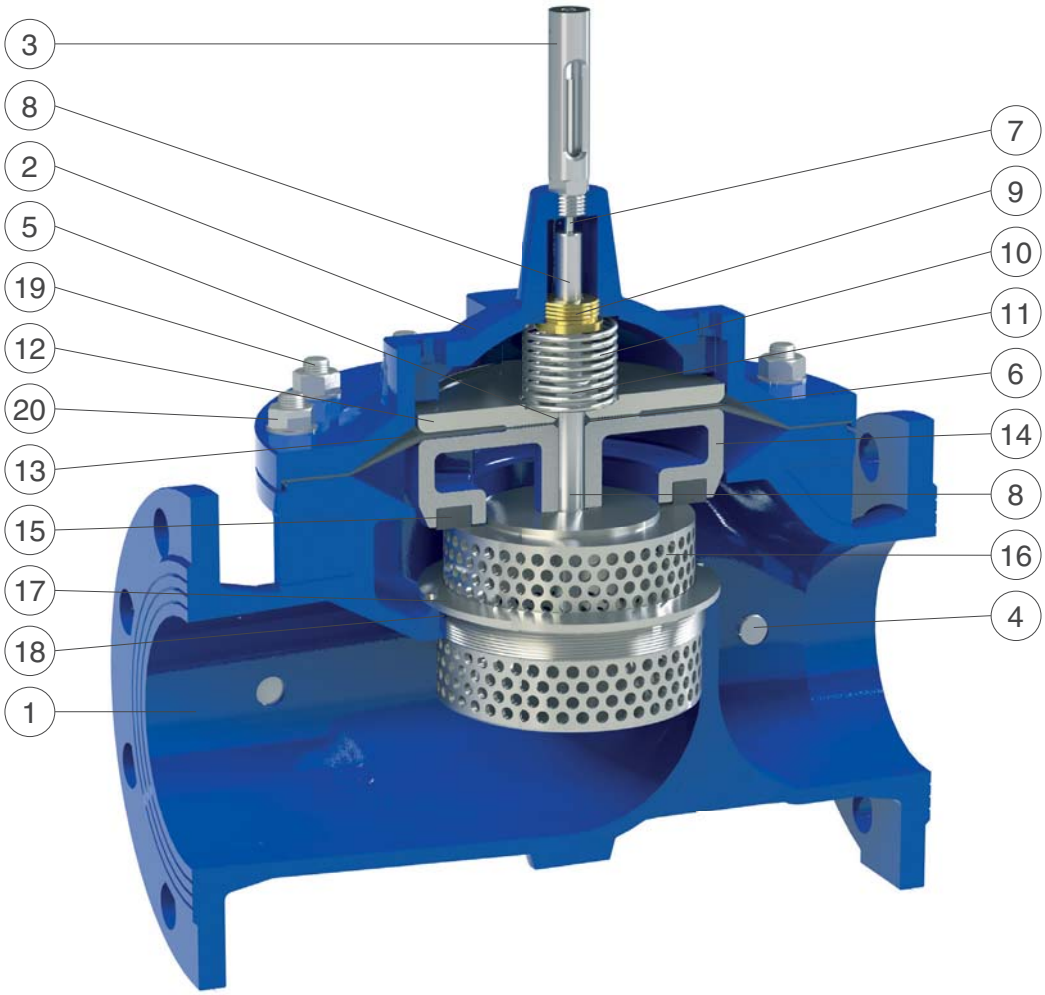

N.	Component	Standard material	Optional
1	Body	ductile cast iron GJS 500-7 or GJS 450-10	
2	Cap	ductile cast iron GJS 500-7 or GJS 450-10	
3	Position indicator	s.s. AISI 303 (nickel-plated brass from DN 300)	stainless steel AISI 303
4	Pressure outlet taps	stainless steel AISI 316	
5	Upper flat O-ring	NBR	EPDM/Viton
6	Obturator O-ring	NBR	EPDM/Viton
7	Indicator stem	stainless steel AISI 303	
8	Main shaft	stainless steel AISI 303	stainless steel AISI 316
9	Guide ring	bronze CuSn5Zn5Pb5	stainless s. AISI 304/316
10	Spring	stainless steel AISI 302	
11	Locking nut	stainless steel AISI 304	stainless steel AISI 316
12	Upper flat	painted steel	stainless s. AISI 304/316
13	Diaphragm	polyamide-Nylon	neoprene/EPDM-Nylon
14	Obturator	AISI 303 (DN 50-65), steel, duct. c. iron (from DN 150)	stainless s. AISI 304/316
15	Plane gasket	NBR	
16	Anti-cavitation gasket holder CP	stainless steel AISI 303 (304 from DN 150)	stainless steel AISI 316
17	Seat for anti-cavitation system CP	stainless steel AISI 303 (316 from DN 150)	stainless steel AISI 316
18	Seat O-ring	NBR	EPDM/Viton
19	Studs	stainless steel AISI 304	stainless steel AISI 316
20	Nuts and washers	stainless steel AISI 304	stainless steel AISI 316

The list of materials and components is subject to changes without notice.

XLC 400 - CP anti-cavitation version - Technical data

DN (mm)	40	50	65	80	100	150	200	250	300	400
Kv (m^3/h)	20	20	34	50	84	205	331	563	752	1337
Stroke (mm)	15	15	18	21	27	43	56	70	84	110

Head loss coefficient

Kv coefficient representing the flow rate which is flowing through the valve fully open, and producing a head loss of 1 bar.

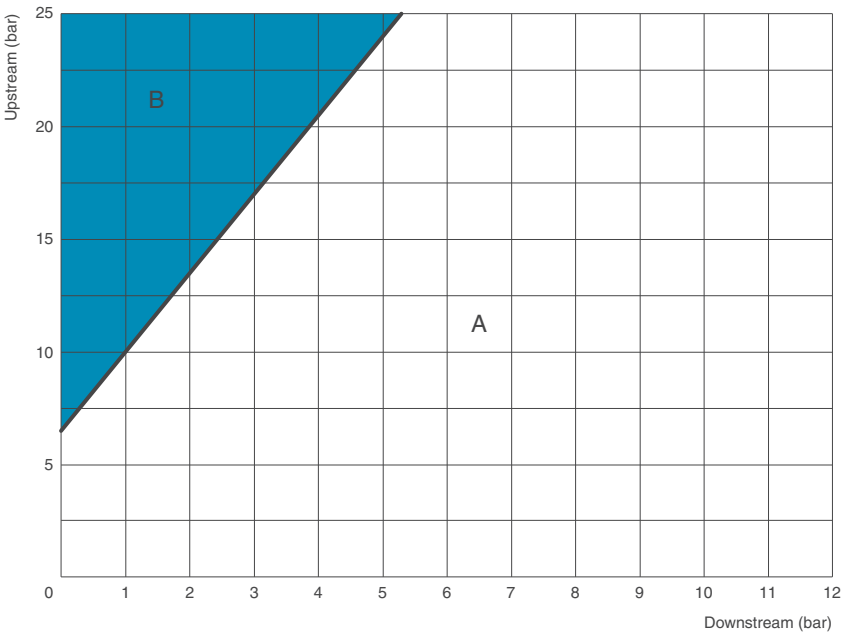

Cavitation chart

The cavitation analysis is very important since it may lead to substantial damages, in addition to vibration and noise. The cavitation chart has to be used to determine whether the working point obtained by the intersection of the lines, connecting upstream (y axis) and downstream (x axis) pressure conditions, lies within one of the two zones to be identified as follows:

- A: Recommended working conditions;
- B: Damage cavitation.

The chart is to be used for valves modulating with an opening percentage between 35-40% at standard water temperature and elevation below 300 m. More accurate results are determined through the control valves sizing software CSA-CVS.

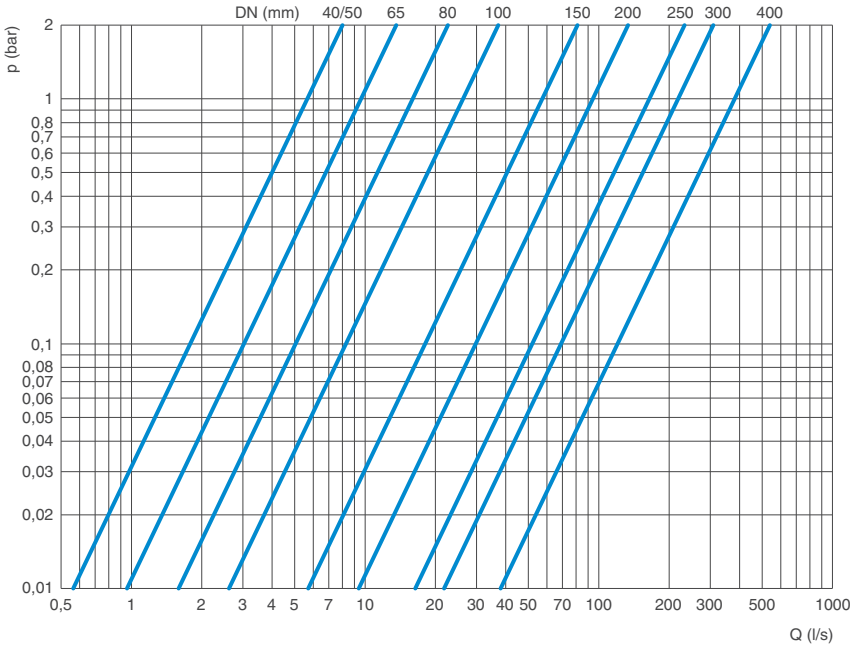

Head loss chart

The chart indicates the head loss of XLC 400 automatic control valves fully open versus flow rate in l/s.

Recommended flow rate

The following chart shows the recommended flow rate for the proper sizing of XLC 400 control valves.

DN (mm)			40/50	65	80	100	150	200	250	300	400
Flow rate (l/s)	Recommended	Min.	0,4	0,7	1,0	1,6	3,5	6,3	9,8	14	25
		Max.	3,9	6,6	9,7	16	40	64	109	146	260
	Pressure relief	Max.	9,8	16	25	39	88	157	245	353	628

The technical informations are indicative and can change according to the number and dimension of holes.

XLC 400 - Standard and anti-cavitation versions - Technical data

Kv to valve opening chart

The following chart shows the opening percentage of XLC 400, XLC 400-AC and XLC 400-CP (provided with anti-cavitation system) versus the Kv.

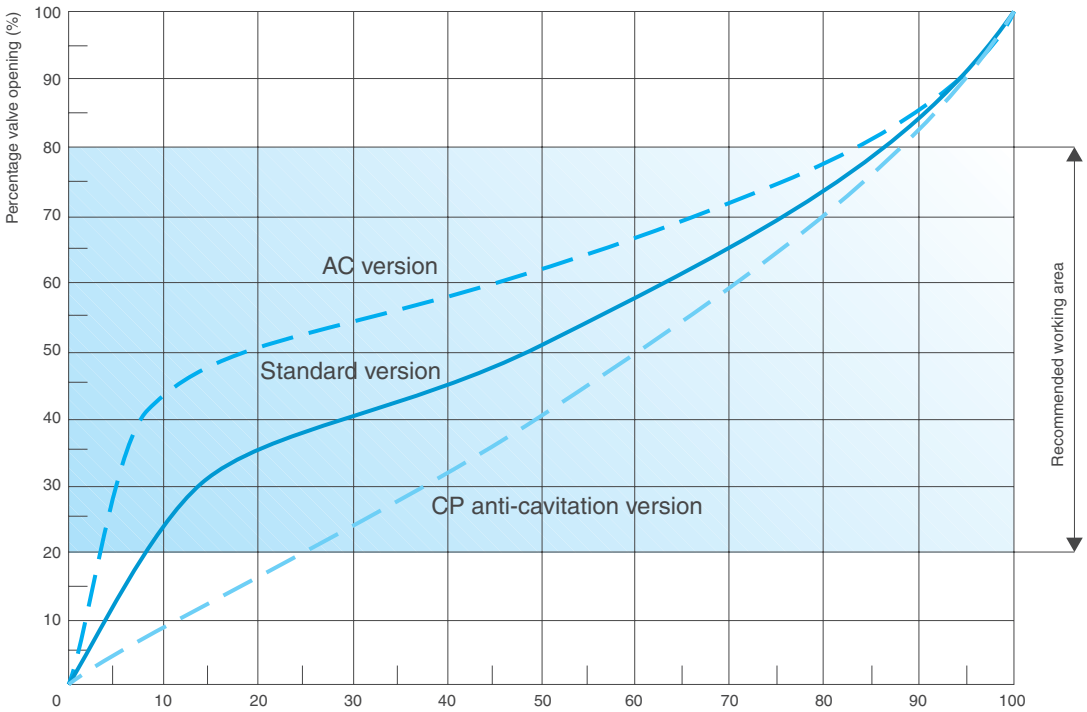

The charts are purely indicative and change with the valve DN and configuration.

Working conditions

Treated filtered water.
Maximum temperature: 70°C.
Minimum pressure on the pilot : 0,5 bar plus head loss.
Maximum pressure : 25 bar.

Standard

Designed in compliance with EN 1074.
Pressure rating 25 bar.
Flanges according to EN 1092/2 (different drilling on request).
Epoxy painting applied through FBT technology blue RAL 5005.

Weights and dimensions

DN (mm)	A (mm)	B (mm)	C (mm)	D (mm)	E (mm)	Weight (Kg)
40	230	162	83	233	30	18
50	230	162	83	233	30	18
65	290	194	93	255	30	23,5
80	310	218	100	274	30	28
100	350	260	118	316	30	39
150	480	370	150	431	30	84
200	600	444	180	540	30	138
250	730	570	213	577	40	264
300	850	680	242	598	40	405
400	1100	870	310	895	40	704

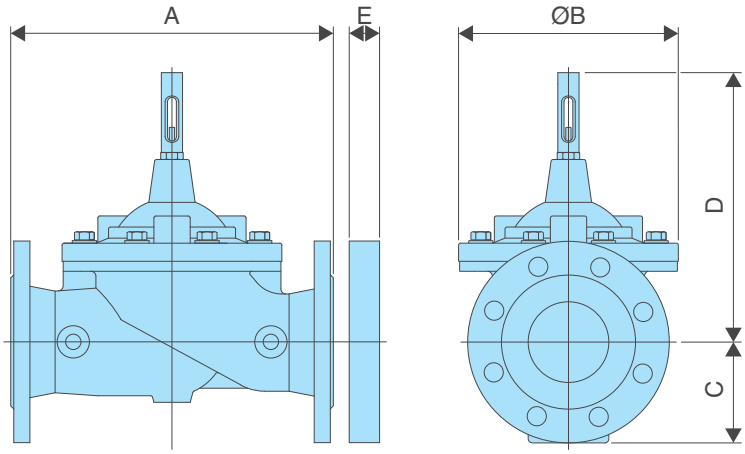

The dimension E in the picture above refers only to applications where it is necessary to add a flanged orifice downstream or upstream of the valve, for example for flow control or cavitation prevention.

All values are approximate, consult CSA service for more details.